DTE 24
Mobil fluid.

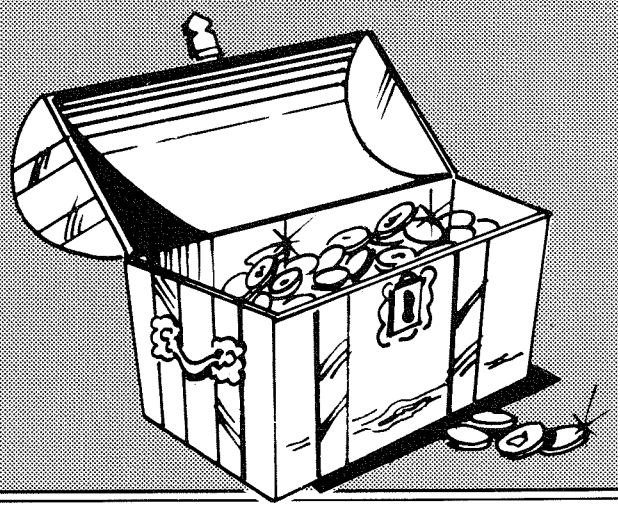

Coin-Operated Amusement Rides and Play Slides

INTRODUCTION

We thank you for purchasing your new Kiddie Ride from Jolly Roger (Amusement Rides) Limited and trust it will give many years of trouble-free profitable service. Whilst this booklet has been produced primarily with our United Kingdom and European customers in mind it will certainly be of benefit to other users worldwide. Reference is made to the United Kingdom Health and Safety at Work Act - Code of Safe Practice at Fairs (which specifically includes coin operated Children's Rides),the proposed Industry Standard for the construction, operation and use of coin-operated Children's Rides, and the EC Declaration of Conformity (CE Mark). Although the rides specifically comply with United Kingdom and European Community regulations, similar regulations may exist in other countries worldwide. In any event the guidance given herein is relevant to the safe operation of childrens rides wherever they may be operated

Jolly Roger (Amusement Rides) Ltd.
College View Works, Manby Road, Grimoldby, Louth, Lincolnshire, England. LN11 8HE
Telephone (0507) 328856 Telex 56369 NTHLE G Telefax (0507) 327060

MAINTENANCE (KIDDIE RIDES)

Whilst the rides do not require any periodic maintenance as such, they should be checked regularly to ensure that they are in a safe condition for operation by the general public (See the Health and Safety Section for furhter information). In the unlikely event of the necessity to effect adjustments or repairs to the machine, the following procedure is recommended.

ALWAYS DISCONNECT THE MACHINE FROM THE POWER SUPPLY BEFORE REMOVING ANY COVERS.

Coin Acceptor

Remove the coin acceptor by turning the lock situated on the faceplate - the coin acceptor can now be removed from the machine and the wires pulled off the coin acceptor microswitch if desired. Note - Please ensure that the wires are reconnected on the correct terminals (C and NO). To remove litter from the coin acceptor, slide off the cylindrical spring clip and remove side plate, then remove any litter or obstruction. Reassemble in reverse order ensuring that the pins on the main coin acceptor body locate in the dimples on the side plate. Adjusting screws for coin diameter and thickness are also located on the side plate, although these are factory set and should not normally require alteration.

Ride Time adjustment

Access to the time control knob is through a hole located in the bottom cover of the machine. The knob turns clockwise to increase and the time is variable from 1-2 minutes.

Volume adjustment

The sound effect volume control is situated next to the time control adjustment and also turns clockwise to increase.

To gain access to other components the bottom cover should be removed. This is done by removing the four rubber feet which are held on with M6 Hexagon Socket screws.

Drive Belt Adjustment

The "final drive" belt is adjusted by loosening the 4 bolts holding the camshaft bearings and sliding the whole assembly to adjust. Note: This belt should run tight. The

countershaft belt is adjusted by loosening the 4 bolts holding the motor and sliding the motor to adjust.
Note: This belt should run quite loose. Both belts are correctly tensioned during manufacture and should not require adjustment.

Bearings

All bearings are greased for life and should not be re-packed with grease.

Fuses

Fuses are located in the side of the Electronic control unit.

Body and other mouldings

Clean with damp cloth rinsed out in soapy water, do not hose down or flood the machine. Alternatively, a proprietory household furniture cleaner may be used.

Removal of Body and main chassis

To remove the body, undo the bolts holding it to the chassis, situated just under the body shell. Disconnect the electrical wiring underneath the body shell by undoing the plug and socket connector. The body may now be removed. After removing the body shell and the bottom cover the chasis cover (top cover) may be removed by undoing the four corner bolts, removing them and loosening the cable gland to allow the mains cable to be pushed through the cover. The cover may now be removed. Note: On reassembling ensure that the four rubber washers are replaced between the fibreglass and the metal chassis.

COIN-OPERATED

AMUSEMENT RIDES

HEALTH AND SAFETY - CODE OF SAFE PRACTISE AT FAIRS - INDUSTRY STANDARDS

Our equipment has been manufactured to an agreed industry standard of construction and safety in order to conform with the EC Directive on machinery and is thereby eligible to carry the CE mark from 1st January, 1993

Safety checks

A check of each coin-operated Kiddie Ride should, whenever reasonably practical, be carried out each day before it is made available for the public. The following checks are recommended :-

(a) Check that the mains plug is undamaged and securely attached to the mains cable.

(b) Check that the mains cable is undamaged.

(c) Check that there are no broken or damaged parts of the ride which may cause injury.

(d) Check that all guards are in place thus preventing any access to the mechanism.

(e) Finally apply pressure to the ride to ensure that it is firmly secured to the base stem and check that all advisory literature is in place.

(f) Ensure the area around is free from obstruction and that persons passing by are not in any danger.

(g) The ride should be kept clean and free from any customised additions unless approved by the manufacturer.

If as a result of the above visual checks any doubt arises, then the company, supplier or person responsible for the ride should be notified immediately.

In addition to our manufacturers test and the daily checks every ride shall be subject to a thorough examination by an appointed person once every period of 14 months. (U.K. Health and Safety at Work Act - Code of safe practice at Fairs).

The appointed person need not be independent. But should be at least 21 years old and competent by such qualifications, knowledge, experience and supporting services to make an assessment of the safety of the ride including any associated equipment/parts e.g. electrical, hydraulic or pneumatic.

The appointed person should have technical competence to recognise the significance of the effects of stresses, loadings

and fatigue and also be competent to determine the extent of permissible wear.

On completion of the thorough examination a certificate (see Annex C) is to be issued which must be retained and be available for inspection by the Health and Safety Inspectorate and/or the appropriate offer of the Environmental Health Department of a Local authority.

Thorough Examination Procedure - a suitable procedure is at Annex B and a form of certificate at Annex C. This procedure is in general terms and may need to be amplified in specific areas to take account of designer/manufacturers instructions which the appointed person needs to know.

MAINTENANCE (CAROUSELS)

Whilst the carousels do not require any periodic maintenance as such, they should be checked regularly to ensure that they are in a safe condition for operation by the general public (See he Health and Safety section for further information). In the unlikely event of the necessity to effect adjustments or repairs to the machine, the following procedure is recommended.

ALWAYS DISCONNECT THE MACHINE FROM THE POWER SUPPLY BEFORE REMOVING ANY COVERS.

Coin Acceptor

Remove the coin acceptor by turning the lock situated on the faceplate - the coin acceptor can now be removed from the machine and the wires pulled off the coin acceptor microswitch if desired. Note - Please ensure that the wires are reconnected on the correct terminals (C and NO). To remove litter from the coin acceptor, slide off the cylindrical spring clip and remove side plate, then remove any litter or obstruction. Reassemble in reverse order ensuring that the pins on the main coin acceptor body locate in the dimples on the side plate. Adjusting screws for coin diameter and thickness are also located on the side plate, although these are factory set and should not normally require alteration.

Ride Time adjustment

Access to the time control knob is through a door located in the bottom cover of the machine. The knob turns clockwise to increase and the time is variable from 1-2 minutes. A counter for the number of operations of the machine is also mounted on this door.

Volume adjustment

The sound effect volume control is situated next to the time control adjustment and also turns clockwise to increase. To gain access to other components the bottom cover should be removed. This is done by removing the four rubber feet which are held on with M6 Hexagon Socket screws.

Drive Belt Adjustment

The gearbox drive belt is adjusted by loosening the 4 bolts holding the motor and sliding the motor to adjust.

Note: This belt should run quite loose, and is correctly tensioned during manufacture, it should not require adjustment.

Bearings

All bearings are greased for life and should not be re-packed with grease.

Gearbox

The gearbox is lubricated for life and should not require replenishing.

Fuses

Fuses are located in the side of the Electronic control unit.

Body and other mouldings

Clean with damp cloth rinsed out in soapy water, do not hose down or flood the machine. Alternatively, a proprietory household furniture cleaner may be used.

Removal of main chassis

To remove the main chassis remove the bottom cover as previously described. Note: This cover must be removed with the access door to the electronic control unit open, and the wires to the counter and loudspeaker disconnected. Disconnect the wiring loom by undoing the plug and socket connector beneath the main body. Undo the four nuts in the top centre of the chassis, holding the top support ring to the centre shaft. The main chassis should now be free for removal.

MAINTENANCE (NOVELTY ROWING BOAT)

The Novelty Rowing Boat requires only the minimal amount of periodic maintenance and no adjustments are required, the ride should be checked regularly to ensure it is in a safe condition for use by the general public (see Health and Safety section for further information).

Lubrication of mechanism

It is recommended that the following parts are lubricated one every month:-

Chains - using a light machine oil or cycle oil, or alternatively an aerosol chain-lube preparation.

Freewheels - using a light machine oil or cycle oil run a small amount of oil into the freewheel ratchet whilst turning the wheel round. The sound made by the ratchet will alter, indicating that it has received sufficient lubrication.

Wheels and Castors - it is beneficial if, once a year, the wheels and castors are removed from the machine and the wheel bearings are re-greased or oiled as far as is practical.

Bearings

All bearings are greased for life and should not be re-packed with grease.

Body

Clean with a damp cloth rinsed out with soapy water, or, alternatively, a proprietory household furniture cleaner may be used.

Removal of Body from main chassis

In the event it should be necessary to remove the body from the chassis, firstly remove the handgrips then undo the fixing bolts and then lift off the body.

COIN-OPERATED AMUSEMENT RIDES

OPERATING ADVICE

The Novelty Rowing Boats should be operated in a fenced (enclosed) area with a bumper rail around it at a height to the centre of 12 inches (300 mm) to correspond with the bumper rubber on the Boats. No ground should be used which incorporates a slope or is uneven. Remember, these vehicles have no brakes, and cannot move backwards.

COIN-OPERATED

AMUSEMENT RIDES

Annex A

MANUFACTURER'S TEST CERTIFICATE

Name/Type of Ride
Serial Number
Date of Manufacture
Date of Sale

We certify that the aforementioned coin-operated Children's Ride was manufactured and tested to accord with the requirement of the HEALTH AND SAFETY AT WORK ETC ACT 1974 (applicable in the United Kingdom).

Signed
Company Name
Address

Annex B

THOROUGH EXAMINATION AND TEST BASIC PROCEDURE KIDDIE RIDES

Machanical Examination

1. Remove inspection covers (where fitted) or sufficient casings so as to allow thorough examination of moving parts and any part of the structure which could conceivably be regarded as vital to the safe running of the ride.
2. Check that all bolts and nuts are tight and fitted with shake-proof or spring washers, where appropriate.
3. Check that all bearings are in good conditions and lubricated where necessary.
4. Check that lubrication levels are correct (in gear boxes and hydraulic reservoirs etc.)where appropriate.
5. Check that couplings, belts, chains or hydraulic rams are in good condition and in the case of hydraulic parts and pneumatic systems, ensure that all seals are secure. Check seals for leakage of hydraulic fluid or air as appropriate.
6. Passenger restraints, where fitted, to be checked for effectiveness.
7. When confident that all reasonable mechanical checks have been carried out, check for damage or weakness in casings and in the body of the ride.

Annex B

Electrical Examination

1. Check mains input lead for damage and that correct polarity has been observed.
2. Check that any fuses fitted are the correct rating and type.
3. Check that all metal parts are properly bonded to earth (see Note 3 below).
4. Check to ensure good connections and freedom from damp and dirt on connectors, cable runs, etc.
5. Where appropriate check that correct wattage lamps are fitted and that fittings are not damaged.
6. Carry out portable appliance test (PAT) to ensure good insulation.
7. Check low voltage to coin mechanism and other devices, e.g. control levers etc.
8. At an on-site examination where an RCCB or ELCB is fitted adjacent to the ride it should be checked for suitability and safe operation.

Test

9. Finally test the ride by the insertion of a coin and by applying a loading to the ride slightly in excess of the minimum load of 45kg per passenger. (Which is the minimum load laid down by the Code of Safe Practice at Fairs for a child).

Note 3

On most modern rides, low voltage (derived from a dual wound isolated transformer) is used on all components e.g. coin slot, control levers, lights etc. In such cases bonding to earth of the metal parts associated with these components and other isolated metal parts, may not be necessary, or indeed desirable. If in doubt manufacturers' advice should be sought.

This test list can only afford general guide lines. The Examiner must use discretion and always be aware that the ride safety is the paramount objective. If all checks are found correct fill out and sign the appropriate form. If any defects are found disconnect the ride and inform the Operator or

person responsible. Disconnection of the ride should include removal of the fuses or some other means of immobilising the ride prior to informing the Operator or person responsible. Such tests should be carried out at least every fourteen months but it must be realised that the safety of the ride is essential at all times and failure to keep the ride in good safe condition, in accordance with the above guide lines and the Code of Safe Practice at Fairs, could render the Operator liable to prosecution under the 'Health and Safety at work' etc. Act 1974 (United Kingdom).

COIN-OPERATED — JOLLY ROGER — AMUSEMENT RIDES

PREFACE

1. This Illustrated Parts Catalogue has been compiled to provide a means of ready identification of parts and to be of assistance in the requisition and issue of the parts.

2. Revisions to this Catalogue will be published as and when necessary. They will be numbered consecutively and the Record of Revisions is to be completed for each Revision embodied.

3. When ordering replacement parts, the following information should be quoted:

   (1) Name of ride.

   (2) Item number of replacement parts.

   (3) Part number of replacement parts.

   (4) Description of replacement parts.

   (5) Quantity required.

4. When ordering a complete amusement ride, the name and model number should be quoted - see List of Model Numbers.

5. Orders for amusement rides and replacement parts should be addressed to:

Jolly Roger (Amusement Rides) Ltd
College View Works
Manby Road
Grimoldby
Louth
Lincolnshire LN11 8HE
England

Telephone: (0507) 328856
Telex: 56389 NTHLE9
Telefax: (0507) 327060

Prepared for Jolly Roger (Amusement Rides) Ltd

by

Technical Publications (Lincs)
71 Northgate, Sleaford, Lincolnshire, NG34 7AB
England

COIN-OPERATED — JOLLY ROGER — AMUSEMENT RIDES

RECORD OF REVISIONS

REV NO	ISSUE DATE	DATE INSERTED	BY	REV NO	ISSUE DATE	DATE INSERTED	BY
1				25			
2				26			
3				27			
4				28			
5				29			
6				30			
7				31			
8				32			
9				33			
10				34			
11				35			
12				36			
13				37			
14				38			
15				39			
16				40			
17				41			
18				42			
19				43			
20				44			
21				45			
22				46			
23				47			
24				48			

COIN-OPERATED — JOLLY ROGER — AMUSEMENT RIDES

ILLUSTRATED PARTS CATALOGUE

CONTENTS

List of model numbers
Mains voltage powered rides
  Mini ride chassis assembly
  Standard ride chassis assembly
    (Including: Standard ride (Bulldozer) and offset ride)
  Large ride chassis assembly
  Cup "n" Saucer carousel chassis assembly
Battery powered rides
  Formula 1 racing car assembly
  Police/ATC motorcycle assembly
  Dizzy Dodger assembly (to be issued)
Manually powered rides
  Novelty rowing boat assembly
Body shell assemblies
  Paddle steamboat body shell assembly
  Mini jeep body shell assembly
  Mini train body shell assembly
  Bi plane body shell assembly
  Formula 1 racing car body shell assembly
  Jet fighter aircraft body shell assembly
  Tractor body shell assembly
  Police/ATC motorcycle body shell assembly
  Santa Fe train body shell assembly
  Bulldozer body shell assembly
  Monster jeep body shell assembly
  Veteran van body shell assembly
  Helicopter body shell assembly
  Big truck racer body shell assembly
  Cup "n" Saucer carousel body shell assembly
Miscellaneous
  Coin acceptor and cash box assembly
  Kiddie rides mechanism cover assembly
  Cup "n" Saucer carousel mechanism cover assembly

COIN-OPERATED — JOLLY ROGER — AMUSEMENT RIDES

LIST OF MODEL NUMBERS

MAINS VOLTAGE POWERED MODELS

1000000	Paddle steam boat
1000001	Mini jeep
1000002	Mini train
1000003	Bi plane
1000004	Formula 1 racing car
1000005	Jet fighter aircraft
1000006	Tractor
1000007	Police/ATC motorcycle
1000008	Santa Fe train
1000009	Bulldozer
1000010	Monster jeep
1000011	Veteran van
1000012	Helicopter
1000013	Big truck racer
1000014	Cup "n" Saucer carousel

BATTERY POWERED MODELS

1010001	Formula 1 racing car
1010002	Police/ATC motorcycle
1010003	Dizzy dodger
1010004	Rotaboat

MANUALLY POWERED MODELS

1020001	Novelty rowing boat

COIN-OPERATED — JOLLY ROGER — AMUSEMENT RIDES

MAINS VOLTAGE POWERED RIDES

COIN-OPERATED — JOLLY ROGER — AMUSEMENT RIDES

MINI RIDE CHASSIS ASSEMBLY

CONTENTS

Page

Fig 1 Mini ride chassis assembly 2
Parts list - Mini ride chassis assembly 3/4

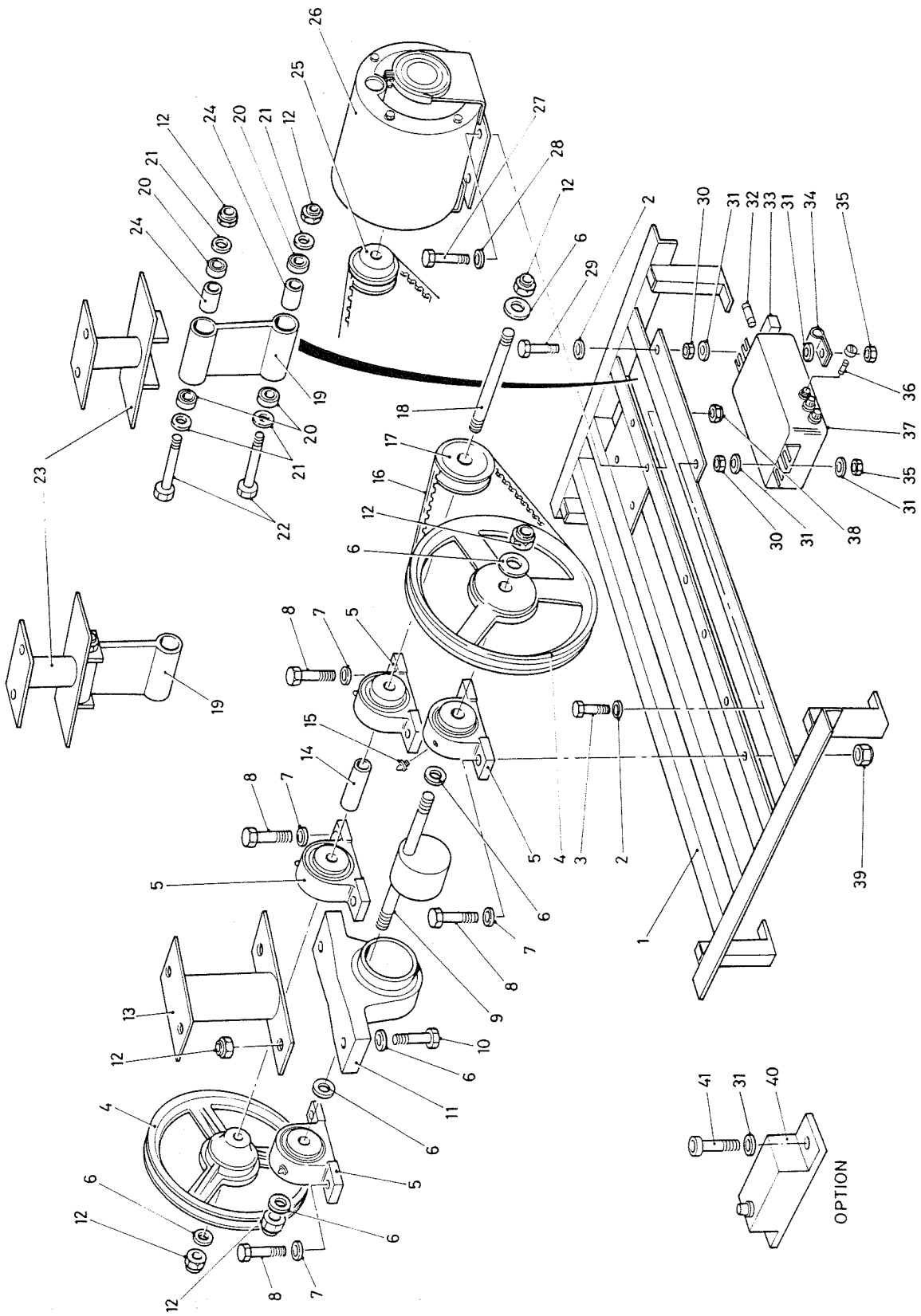

Fig.1 Mini ride chassis assembly

Parts list - Mini ride chassis assembly

Item No	Part No	Description	Qty
	3000000	Chassis assembly, mini ride, comprising:	-
1	3100000	Chassis, mini	1
2	7600000	Washer, M6	2
3	7000203	Bolt, cap head, hexagon socket, M6 x 25	1
4	8000000	Pulley, 224 SPA x 12 mm x 1A	2
5	6000000	Housing, bearing assembly, NP12	4
6	7600300	Washer, M12	10
7	7600200	Washer, M10	8
8	7000604	Bolt, M10 x 35	8
9	8200000	Camshaft	1
10	7000707	Bolt, M12 x 50	2
11	6000001	Housing, bearing assembly, SL40	1
12	7700300	Nut, Nyloc, M12	6
13	3200000	Arm, top	1
14	7000900	Bolt, precision, M12 x 110	2
15	9050000	Shim, M12	4
16	6100000	Bearing, 6001 ZZ	4
17	3200001	Arm, pivot	1
18	9000002	Spacer, 60 mm long	2
19	8100000	Belt, vee, A 33 (A 870)	2
20	2000000	Motor, 110 volts, 60 Hz	1
20	2000001	Motor, 220/240 volts 50 Hz (alternative)	1
21	7600100	Washer, M8	4
22	7000503	Bolt, M8 x 25	4
23	8000001	Pulley, 43 SPA x ½ in x 1A	1
24	9000003	Spacer, 89 mm long	1
25	9100000	Nipple, grease	5
26	8000002	Pulley, 43 SPA x 12 mm x 1A	1
27	8210000	Countershaft	1
28	7000204	Bolt, cap head, hexagon socket, M6 x 30	1
29	7700001	Nut, M6	2
30	7600001	Washer, M6 x 25 dia	6
31	2400001	Fuse, 32 mm, 10 amp, anti-surge	1
32	2300000	Block, terminal	1
33	9200000	P-clip	1
34	7700000	Nut, Nyloc, M6	2
35	2400000	Fuse, 20 mm, 1.6 amp	1
36	2100000	Electronic unit, timer/sound/light flasher	1
36	2100001	Electronic unit, timer/sound/light flasher (USA, Canada only)	1
-	2600000	Loudspeaker (not illustrated)	1
37	7700100	Nut, Nyloc, M8	4
38	7700200	Nut, Nyloc, M10	8
39	2100002	Coin stepper, multi-coin selection (optional)	1
40	7000202	Bolt, cap head, hexagon socket, M6 x 20	2

COIN-OPERATED — JOLLY ROGER — AMUSEMENT RIDES

STANDARD RIDE CHASSIS ASSEMBLY

Including: Standard ride (Bulldozer) and offset ride

CONTENTS

Page

Fig 1 Standard ride chassis assembly 2
Parts list - Standard ride chassis assembly 3

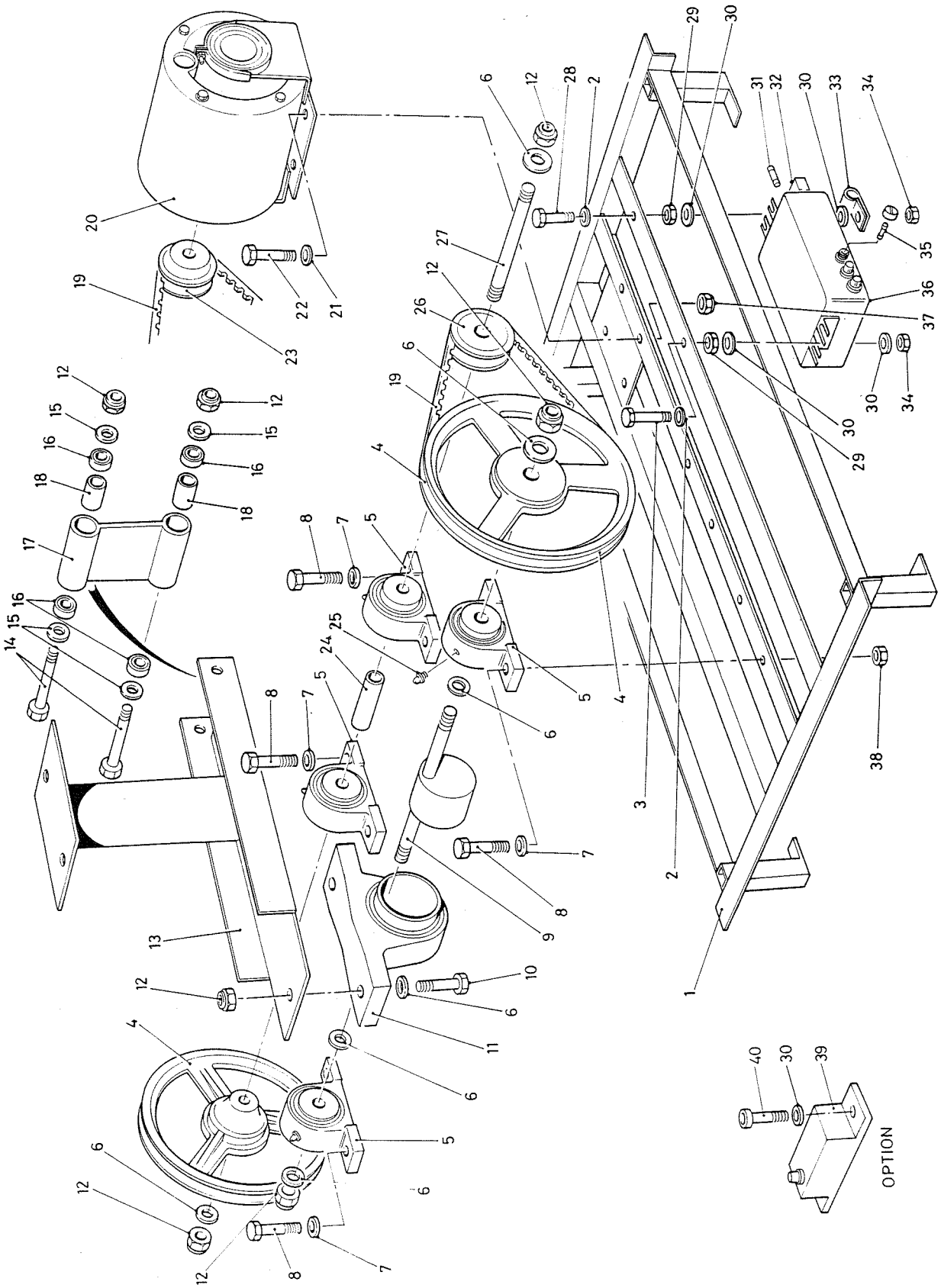

Fig.1 Standard ride chassis assembly

Parts list - Standard ride chassis assembly
Including: Standard ride (Bulldozer) and offset ride

Item No	Part No	Description	Qty
	3000001	Chassis assembly, standard ride	-
	3000002	Chassis assembly, standard ride (Bulldozer)	-
	3000003	Chassis assembly, offset ride	-
		comprising:	
1	3100001	Chassis, standard	1
1	3100002	Chassis, standard (Bulldozer)	1
1	3100003	Chassis, offset	1
2	7600000	Washer, M6	2
3	7000203	Bolt, cap head, hexagon socket, M6 x 25	1
4	8000000	Pulley, 224 SPA x 12 mm x 1A	2
5	6000000	Housing, bearing assembly, NP12	4
6	7600300	Washer, M12	10
7	7600200	Washer, M10	8
8	7000604	Bolt, M10 x 35	8
9	8200000	Camshaft	1
10	7000707	Bolt, M12 x 50	2
11	6000001	Housing, bearing assembly, SL40	1
12	7700300	Nut, Nyloc, M12	6
13	3200000	Arm, top	1
14	7000900	Bolt, precision, M12 x 110	2
15	9050000	Shim, M12	4
16	6100000	Bearing, 6001 ZZ	4
17	3200001	Arm, pivot	1
18	9000002	Spacer, 60 mm long	2
19	8100000	Belt, vee, A 33 (A 870)	2
20	2000000	Motor, 110 volts, 60 Hz	1
20	2000001	Motor, 220/240 volts 50 Hz (alternative)	1
21	7600100	Washer, M8	4
22	7000503	Bolt, M8 x 25	4
23	8000001	Pulley, 43 SPA x ½ in x 1A	1
24	9000003	Spacer, 89 mm long	1
25	9100000	Nipple, grease	5
26	8000002	Pulley, 43 SPA x 12 mm x 1A	1
27	8210000	Countershaft	1
28	7000204	Bolt, cap head, hexagon socket, M6 x 30	1
29	7700001	Nut, M6	2
30	7600001	Washer, M6 x 25 dia	6
31	2400001	Fuse, 32 mm, 10 amp, anti-surge	1
32	2300000	Block, terminal	1
33	9200000	P-clip	1
34	7700000	Nut, Nyloc, M6	2
35	2400000	Fuse, 20 mm, 1.6 amp	1
36	2100000	Electronic unit, timer/sound/light flasher	1
36	2100001	Electronic unit, timer/sound/light flasher (USA, Canada only)	1
-	2600000	Loudspeaker (not illustrated)	1

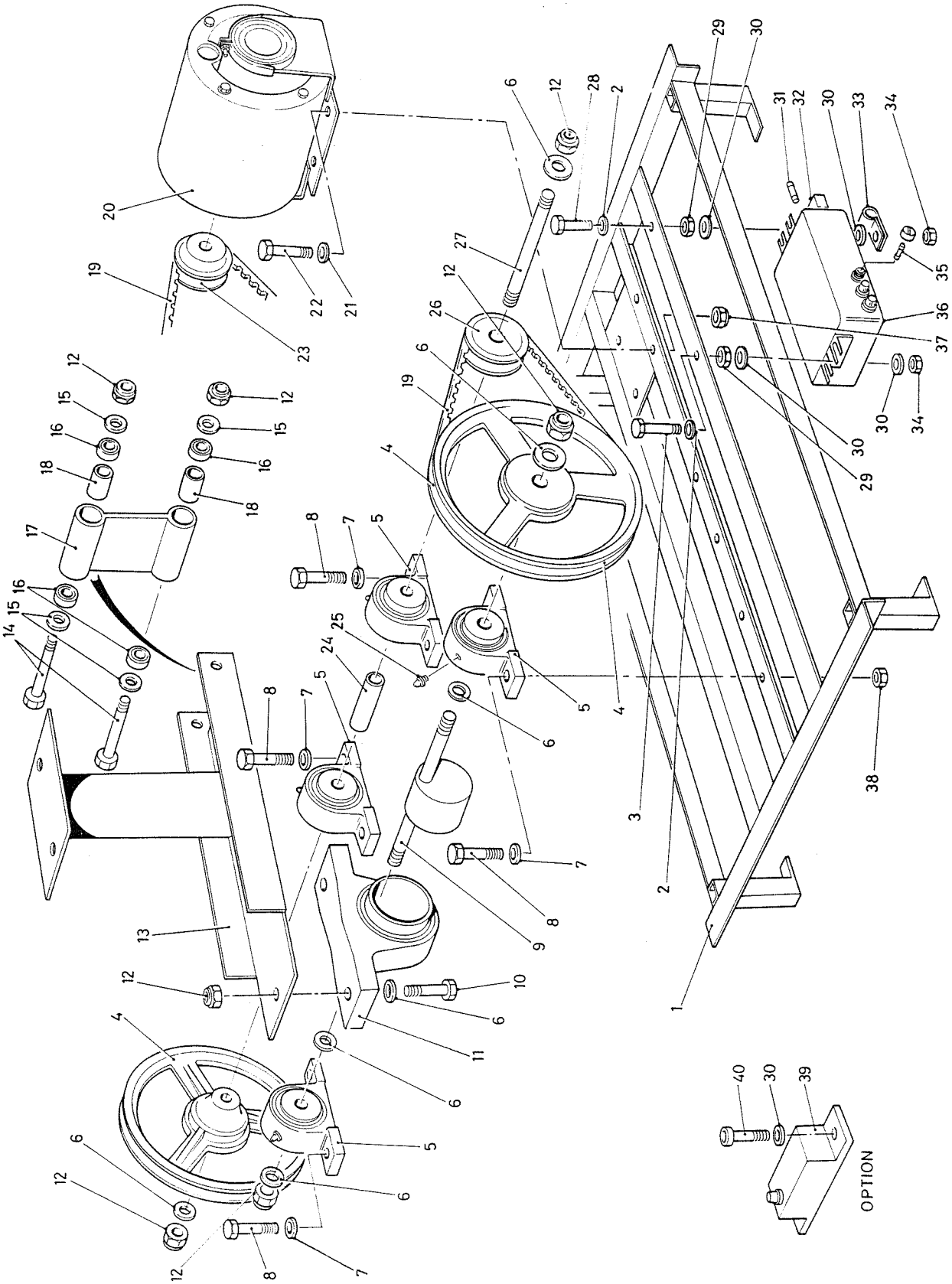

Fig.1 Standard ride chassis assembly

Parts list - Standard ride chassis assembly (continued)
Including: Standard ride (Bulldozer) and offset ride

Item No	Part No	Description	Qty
37	7700100	Nut, Nyloc, M8	4
38	7700200	Nut, Nyloc, M10	8
39	2100002	Coin stepper, multi-coin selection (optional)	1
40	7000202	Bolt, cap head, hexagon socket, M6 x 20	2

COIN-OPERATED AMUSEMENT RIDES

LARGE RIDE CHASSIS ASSEMBLY

CONTENTS

		Page
Fig 1	Large ride chassis assembly	2
Parts list -	Large ride chassis assembly	3/4

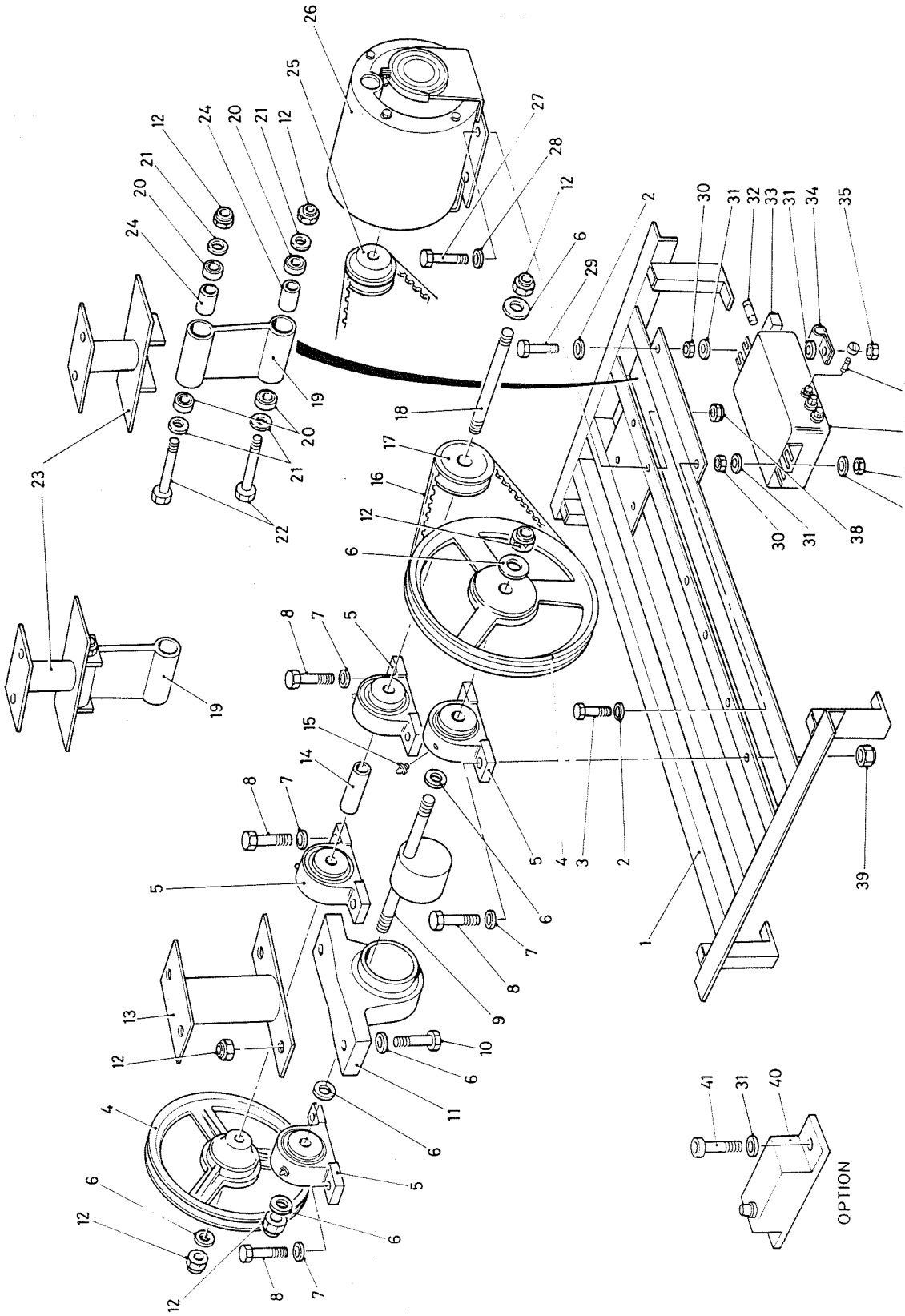

Fig.1 Large ride chassis assembly

Parts list - Large ride chassis assembly

Item No	Part No	Description	Qty
	3000004	Chassis assembly, large ride, comprising:	-
1	3100004	Chassis, large	1
2	7600000	Washer, M6	2
3	7000203	Bolt, cap head, hexagon socket, M6 x 25	1
4	8000000	Pulley, 224 SPA x 12 mm x 1A	2
5	6000000	Housing, bearing assembly, NP12	4
6	7600300	Washer, M12	10
7	7600200	Washer, M10	8
8	7000604	Bolt, M10 x 35	8
9	8200000	Camshaft	1
10	7000707	Bolt, M12 x 50	2
11	6000001	Housing, bearing assembly, SL40	1
12	7700300	Nut, Nyloc, M12	6
13	3200002	Arm, top, front	1
14	9000003	Spacer, 89 mm long	1
15	9100000	Nipple, grease	5
16	8100000	Belt, vee, A33 (A 870)	2
17	8000002	Pulley, 43 SPA x 12 mm x 1A	1
18	8210000	Countershaft	1
19	3200001	Arm, pivot	2
20	6100000	Bearing, 6001 ZZ	8
21	9050000	Shim, M12	8
22	7000900	Bolt, precision, M12 x 110	4
23	3200003	Arm, top, rear	2
24	9000002	Spacer, 60 mm long	4
25	8000001	Pulley, 43 SPA x ½ in x 1A	1
26	2000000	Motor, 110 volts, 60 Hz	1
26	2000001	Motor, 220/240 volts, 50 Hz (alternative)	1
27	7000503	Bolt, M8 x 25	4
28	7600100	Washer, M8	4
29	7000204	Bolt, cap head, hexagon socket, M6 x 30	1
30	7700001	Nut, M6	2
31	7600001	Washer, M6 x 25 dia	6
32	2400001	Fuse, 32 mm, 10 amp, anti-surge	1
33	2300000	Block, terminal	1
34	9200000	P-clip	1
35	7700000	Nut, Nyloc, M6	2
36	2400000	Fuse, 20 mm, 1.6 amp	1
37	2100000	Electronic unit, timer/sound/light flasher	1
37	2100001	Electronic unit, timer/sound/light flasher (USA, Canada only)	1
-	2600000	Loudspeaker (not illustrated)	1
38	7700100	Nut, Nyloc, M8	4
39	7700200	Nut, Nyloc, M10	8
40	2100002	Coin stepper, multi-coin selection (optional)	1
41	7000202	Bolt, cap head, hexagon socket, M6 x 20	2

COIN-OPERATED JOLLY ROGER AMUSEMENT RIDES

CUP "N" SAUCER CAROUSEL CHASSIS ASSEMBLY

CONTENTS

		Page
Fig 1	Cup "n" Saucer carousel chassis assembly	2
Parts list -	Cup "n" Saucer carousel chassis assembly	3/4

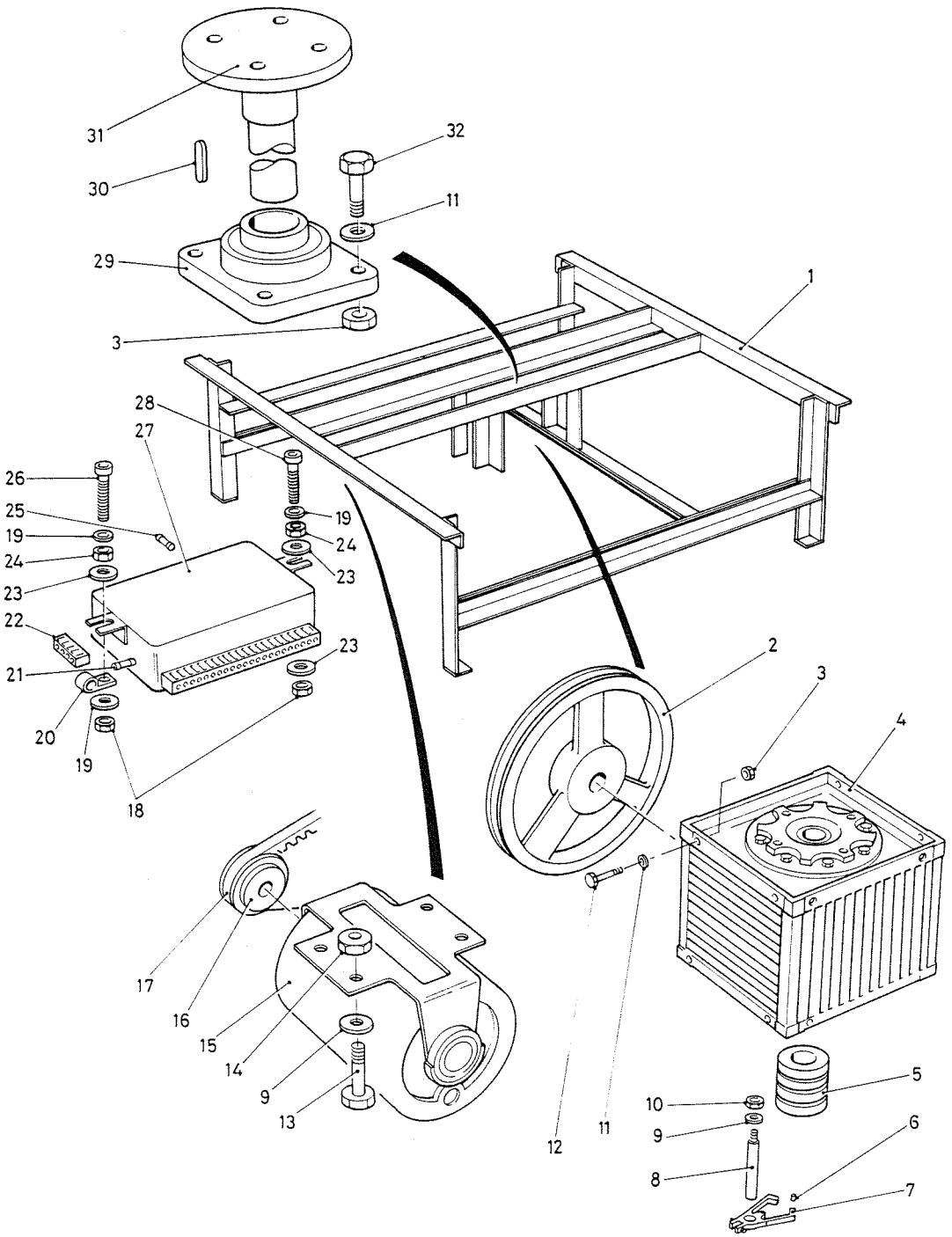

Fig.1 Cup "n" Saucer carousel chassis assembly

Parts list - Cup "n" Saucer carousel chassis assembly

Item No	Part No	Description	Qty
-	3000008	Chassis assembly, comprising:	
1	3100008	Chassis	1
2	8000005	Pulley, 224 SPA x 19 mm x 1A	1
3	7700200	Nut, Nyloc, M10	8
4	8600000	Gearbox	1
5	2050000	Slipring assembly	1
6	2010001	Brush	8
7	2010002	Brush holder	4
8	2010003	Spindle, brush holder	1
9	7600100	Washer, M8	5
10	7700101	Nut, M8	1
11	7600200	Washer, M10	8
12	7000602	Bolt, M10 x 25	4
13	7000503	Bolt, M8 x 25	4
14	7700100	Nut, Nyloc, M8	4
15	2000000	Motor, 110 volts, 60 Hz	1
15	2000001	Motor, 220/240 volts, 50 Hz (alternative)	1
16	8000001	Pulley, 43 SPA x ½ inch x 1A	1
17	8100000	Belt, vee, A33 (A870)	1
18	7700000	Nut, Nyloc, M6	2
19	7600000	Washer, M6	3
20	9200000	P-clip	1
21	2400001	Fuse, 32 mm, 10 amp, anti-surge	1
22	2300000	Block, terminal	1
23	7600001	Washer, M6 x 25 dia	3
24	7700001	Nut, M6	2
25	2400000	Fuse, 20 mm, 1.6 amps	1
26	7000204	Bolt, cap head, hexagon socket, M6 x 30	1
27	2100000	Electronic unit, timer/sound/light flasher	1
27	2100001	Electronic unit, timer/sound/light flasher (USA, Canada only)	1
28	7000203	Bolt, cap head, hexagon socket, M6 x 25	1
29	6000004	Housing, bearing assembly, SL40 (carousel only)	
30	8300002	Key	1
31	8220001	Driveshaft	1
32	7000603	Bolt, M10 x 30	4
-	2500001	Microswitch, heavy duty roller (not illustrated)	1
-	2100002	Coin stepper, multi-coin selection optional (not illustrated)	1

MANUALLY POWERED RIDES

COIN-OPERATED — JOLLY ROGER — AMUSEMENT RIDES

NOVELTY ROWING BOAT ASSEMBLY

CONTENTS

		Page
Fig 1	Novelty rowing boat assembly	2
Parts list -	Novelty rowing boat assembly	3/4

Parts list - Novelty rowing boat assembly

Item No	Part No	Description	Qty
-	1020001	Rowing boat assembly, complete	-
-	1080016	Body shell assembly, comprising:	1
1	1100020	Moulding, body	1
2	1750000	Nameplate	1
3	9150000	Gland	2
4	7700000	Nut, Nyloc, M6	18
5	7600001	Washer, M6 x 25 dia	18
6	7600000	Washer, M6	4
7	7000203	Bolt, cap head, hexagon socket, M6 x 30	4
8	1200001	Handle, large	2
9	9500001	Bumper, rubber	1
-	9500002	Fixing strip, bumper, (not illustrated)	1
10	7000303	Bolt, roofing, M6 x 30	14
-	1300020	Plate, foot tread, large, (not illustrated)	1
-	1300021	Plate, foot tread, small, (not illustrated)	1
-	1700014	Decal, set (not illustrated)	1
-	3000007	Chassis assembly, comprising:	1
11	3100007	Chassis	1
12	5100011	Wheel complete with sprocket, left hand	1
-	5100012	Wheel complete with sprocket, right hand (not illustrated)	1
13	9400003	Handgrip	2
14	9510001	Cover, oar	2
15	7700200	Nut, Nyloc, M10	14
16	8220000	Driveshaft complete with sprocket	2
17	8500000	Spring	2
18	8450002	Chain, drive	2
19	8450003	Link, chain connector	2
20	6000002	Housing, bearing assembly, SL20	4
21	7600200	Washer, M10	16
22	7000604	Bolt, M10 x 35	12
23	7000603	Bolt, M10 x 30	2
24	3700000	Oar	2
25	7700300	Nut, Nyloc, M12	1
26	7600300	Washer, M12	1
27	3500005	Plate, bearing mounting	1
28	5120000	Castor	1
29	6000000	Housing, bearing assembly, NP12	2
30	7000728	Bolt, M12 x 160	1
31	9400005	Stop, rubber	2

COIN-OPERATED AMUSEMENT RIDES

BODY SHELL ASSEMBLIES

COIN-OPERATED — JOLLY ROGER — AMUSEMENT RIDES

PADDLE STEAMBOAT

BODY SHELL ASSEMBLY

CONTENTS

Page

Parts list - Paddle steamboat body shell assembly 3/4

Parts list - Paddle steamboat body shell assembly

Item No	Part No	Description	Qty
-	1080000	Body shell assembly, comprising:	1
-	1100000	Moulding, body with frame	1
-	1500000	Trim, edge	1
-	1300001	Step, edge, 6 inch	2
-	1300002	Plate, foot tread	1
-	5300001	Wheel, steering, small	1
-	3600000	Bracket, wheel, steering	1
-	7700301	Nut, dome, 12 mm	1
-	1600000	Disc, chrome	2
-	1700000	Decal set	1
-	2520000	Switch, pushbutton	1
-	2900000	Lamp, type A, red	1
-	2920000	Bulb, 12 volt, 5 watt, festoon	1
-	2920001	Bulb, 12 volt, 10 mm, wedge	1

COIN-OPERATED AMUSEMENT RIDES

MINI JEEP

BODY SHELL ASSEMBLY

CONTENTS

Page

Parts list - Mini jeep body shell assembly 3/4

Parts list - Mini jeep body shell assembly

Item No	Part No	Description	Qty
-	1080002	Body shell assembly, comprising:	1
-	1100002	Moulding, body with frame	1
-	1800000	Windscreen	1
-	1900000	Bumper	1
-	1300001	Step, edge, 6 inch	2
-	1300004	Plate, foot tread	1
-	5100002	Wheel	4
-	7000702	Bolt, M12 x 25	4
-	5300001	Wheel, steering, small	1
-	3600001	Bracket, wheel, steering	1
-	7700301	Nut, dome, 12 mm	1
-	1600000	Disc, chrome	2
-	1700002	Decal set	1
-	2520000	Switch, pushbutton	1
-	1600003	Reflector, red	2
-	2900004	Lamp, type B	2
-	2920002	Bulb, 12 volt, 5 watt, SCC	2
-	2920001	Bulb, 12 volt, 10 mm wedge	1

COIN-OPERATED — JOLLY ROGER — AMUSEMENT RIDES

MINI TRAIN

BODY SHELL ASSEMBLY

CONTENTS

Page

Parts list - Mini train body shell assembly 3/4

Parts list - Mini train body shell assembly

Item No	Part No	Description	Qty
-	1080001	Body shell assembly, comprising:	1
-	1100001	Moulding, body with frame	1
-	1110001	Moulding, front	1
-	1300001	Step, edge, 6 inch	2
-	1300003	Plate, foot tread	1
-	5300001	Wheel, steering, small	1
-	3600000	Bracket, wheel, steering	1
-	7700301	Nut, dome, 12 mm	1
-	1600000	Disc, chrome	2
-	1700001	Decal set	1
-	2520000	Switch, pushbutton	1
-	2900001	Lamp, type A, amber	1
-	2920000	Bulb, 12 volt, 5 watt, festoon	1
-	2920001	Bulb, 12 volt, 10 mm, wedge	1

COIN-OPERATED — JOLLY ROGER — AMUSEMENT RIDES

BI PLANE

BODY SHELL ASSEMBLY

CONTENTS

Page

Parts list - Bi plane body shell assembly 3/4

Parts list - Bi plane body shell assembly

Item No	Part No	Description	Qty
-	1080003	Body shell assembly, comprising:	1
-	1100003	Moulding, body	1
-	1110002	Wing, top	1
-	1110003	Wing, bottom	1
-	3300002	Frame, body support	1
-	3300003	Frame, top wing	1
-	3350000	Support, wing	2
-	1300005	Plate, foot tread	1
-	1500000	Trim, edge	1
-	1200000	Joystick	1
-	9400002	Handgrip	1
-	1700003	Decal set	1
-	2900000	Lamp, type A, red	1
-	2920000	Bulb, 12 volt, 5 watt, festoon	1

COIN-OPERATED AMUSEMENT RIDES

FORMULA 1 RACING CAR

BODY SHELL ASSEMBLY

CONTENTS

Page

Parts list - Formula 1 racing car body shell assembly 3/4

Parts list - Formula 1 racing car body shell assembly

Item No	Part No	Description	Qty
-	1080004	Body shell assembly, comprising:	1
-	1100004	Moulding, body	1
-	1110004	Moulding, aerofoil	1
-	1300006	Step, edge, 12 inch	2
-	1300007	Plate, foot tread	1
-	5100003	Wheel, front	2
-	5100004	Wheel, rear	2
-	5300000	Wheel, steering, large	1
-	3600001	Bracket, wheel, steering	1
-	7700301	Nut, dome, 12 mm	1
-	1700004	Decal set	1
-	2900000	Lamp, type A, red	1
-	2920000	Bulb, 12 volt, 5 watt, festoon	1

COIN-OPERATED AMUSEMENT RIDES

JET FIGHTER AIRCRAFT BODY SHELL ASSEMBLY

CONTENTS

Page

Parts list - Jet fighter aircraft body shell assembly 3/4

Parts list - Jet fighter aircraft body shell assembly

Item No	Part No	Description	Qty
-	1080005	Body shell assembly, comprising:	1
-	1100005	Moulding, body with frame	1
-	1300008	Plate, foot tread	1
-	1200003	Joystick (with fire button)	1
-	1700005	Decal set	1
-	2900002	Lamp, clear, type A	1
-	2920000	Bulb, 12 volt, 5 watt, festoon	1

COIN-OPERATED — JOLLY ROGER — AMUSEMENT RIDES

TRACTOR

BODY SHELL ASSEMBLY

CONTENTS

Page

Parts list - Tractor body shell assembly 3/4

Parts list - Tractor body shell assembly

Item No	Part No	Description	Qty
-	1080006	Body shell assembly, comprising:	1
-	1100006	Moulding, body with frame	1
-	1110005	Moulding, mudguard	2
-	1300001	Step, edge, 6 inch	2
-	1300009	Plate, foot tread	1
-	5100005	Wheel, front	2
-	5100006	Wheel, rear	2
-	7000702	Bolt, M12 x 25	4
-	5300001	Wheel, steering, small	1
-	3600001	Bracket, wheel, steering	1
-	7700301	Nut, dome, 12mm	1
-	2520000	Switch, pushbutton	1
-	1600000	Disc, chrome	3
-	1700006	Decal set	1
-	2900005	Lamp, type C	2
-	2920002	Bulb, 12 volt, 5 watt, SCC	2
-	2920001	Bulb, 12 volt, 10 mm, wedge	1

COIN-OPERATED AMUSEMENT RIDES

POLICE/ATC MOTORCYCLE BODY SHELL ASSEMBLY

CONTENTS

Page

Parts list - Police/ATC motorcycle body shell assembly 3/4

Parts list - Police/ATC motorcycle body shell assembly

Item No	Part No	Description	Qty
-	1080007	Body shell assembly, comprising:	1
-	1100007	Moulding, body	1
-	1110006	Moulding, bottom	1
-	1110007	Moulding, engine	1
-	1110008	Moulding, mudguard	1
-	3300004	Frame	1
-	1300010	Plate, foot tread	2
-	5100007	Wheel	3
-	5200001	Axle, front wheel	1
-	7000702	Bolt, M12 x 25	2
-	7000718	Bolt, M12 x 110	2
-	9400004	Locator	2
-	5310000	Handlebar	1
-	7400001	U-bolt, M8, handlebar clamp	2
-	7600100	Washer, M8	2
-	7700100	Nut, Nyloc, M8	2
-	9400003	Handgrip	2
-	2520000	Switch, pushbutton	1
-	1600000	Disc, chrome	1
-	1700007	Decal set	1
-	1600002	Reflector, amber	2
-	1600003	Reflector, red	1
-	2900006	Headlamp	1
-	2920001	Bulb, 12 volt, 10 mm, wedge	1
-	2920003	Bulb, 12 volt, 2.2 watt, MES	1

COIN-OPERATED AMUSEMENT RIDES

SANTA FE TRAIN

BODY SHELL ASSEMBLY

CONTENTS

Page

Parts list - Santa Fe train body shell assembly 3/4

Parts list - Santa Fe train body shell assembly

Item No	Part No	Description	Qty
-	1080008	Body shell assembly, comprising:	1
-	1100008	Moulding, body with frame	1
-	1110009	Moulding, front	1
-	1300001	Step, edge, 6 inch	2
-	1300011	Plate, floor tread	1
-	5300000	Steering, wheel, large	1
-	3600001	Bracket, wheel, steering	1
-	7700301	Nut, dome, 12 mm	1
-	2520000	Switch, pushbutton	1
-	1600000	Disc, chrome	11
-	1700008	Decal set	1
-	2900000	Lamp, red, type A	2
-	2900002	Lamp, clear, type A	1
-	2920000	Bulb, 12 volt, 5 watt, festoon	3
-	2920001	Bulb, 12 volt, 10 mm, wedge	1

COIN-OPERATED — JOLLY ROGER — AMUSEMENT RIDES

BULLDOZER

BODY SHELL ASSEMBLY

CONTENTS

Page

Parts list - Bulldozer body shell assembly 3/4

Parts list - Bulldozer body shell assembly

Item No	Part No	Description	Qty
-	1080009	Body shell assembly, comprising:	1
-	1100009	Moulding, body with frame	1
-	1110010	Moulding, fuel can	1
-	1110011	Moulding, jerry can	1
-	1300001	Step, edge, 6 inch	2
-	1300012	Plate, foot tread	1
-	1500001	Joint, trim, front	1
-	1500002	Joint, trim, rear	1
-	1200001	Handle, large	2
-	1200002	Handle, small	2
-	5300000	Wheel, steering, large	1
-	3600001	Bracket, wheel, steering	1
-	7700301	Nut, dome, 12 mm	1
-	1600000	Disc, chrome	26
-	1700009	Decal set	1
-	2520000	Switch, pushbutton	1
-	2900004	Lamp, type B	2
-	2920002	Bulb, 12 volt, 5 watt, SCC	2
-	2920001	Bulb, 12 volt, 10 mm, wedge	1

COIN-OPERATED AMUSEMENT RIDES

MONSTER JEEP

BODY SHELL ASSEMBLY

CONTENTS

Page

Parts list - Monster jeep body shell assembly 3/4

Parts list - Monster jeep body shell assembly

Item No	Part No	Description	Qty
-	1080010	Body shell assembly, comprising:	1
-	1100010	Moulding, body, upper	1
-	1100011	Moulding, body, lower	1
-	1110011	Moulding, Jerry can	1
-	1300001	Step, edge, 6 inch	4
-	1300013	Plate, foot tread	1
-	3300010	Frame	1
-	1800001	Windscreen	1
-	1200002	Handle, small	1
-	5100008	Wheel	4
-	7000702	Bolt, M12 x 25	4
-	5300000	Wheel, steering, large	1
-	3600001	Bracket, wheel, steering	1
-	7700301	Nut, dome, 12 mm	1
-	1600000	Disc, chrome	2
-	1700010	Decal set	1
-	2520000	Switch, pushbutton	1
-	1600002	Reflector, amber	2
-	1600003	Reflector, red	2
-	2900004	Lamp, type B	2
-	2920002	Bulb, 12 volt, 5 watt, SCC	2
-	2920001	Bulb, 12 volt, 10 mm, wedge	1

COIN-OPERATED AMUSEMENT RIDES

VETERAN VAN

BODY SHELL ASSEMBLY

CONTENTS

Page

Parts list - Veteran van body shell assembly 3/4

Parts list - Veteran van body shell assembly

Item No	Part No	Description	Qty
-	1080011	Body shell assembly, comprising:	1
-	1100012	Moulding, body	1
-	1110012	Moulding, roof	1
-	1110013	Moulding, mudguard	2
-	3300005	Frame, body	1
-	3300006	Frame, windscreen	1
-	1300001	Step, edge, 6 inch	2
-	1300014	Plate, floor tread	1
-	3500002	Stop, tube end, 1 inch	4
-	3500003	Stop, tube end, ¾ inch	2
-	1200002	Handle, small	2
-	5100009	Wheel	4
-	7000702	Bolt, M12 x 25	4
-	5300000	Wheel, steering, large	1
-	7700301	Nut, dome, 12 mm	1
-	1600000	Disc, chrome	9
-	1700010	Decal set	1
-	2520000	Switch, pushbutton	1
-	1600003	Reflector, red	2
-	3600002	Bracket, headlamp	1
-	2900004	Lamp, type B	2
-	2920002	Bulb, 12 volt, 5 watt, SCC	2
-	2920001	Bulb, 12 volt, 10 mm, wedge	1

COIN-OPERATED — JOLLY ROGER — AMUSEMENT RIDES

HELICOPTER

BODY SHELL ASSEMBLY

CONTENTS

Page

Parts list - Helicopter body shell assembly 3/4

Parts list - Helicopter body shell assembly

Item No	Part No	Description	Qty
-	1080012	Body shell assembly, comprising:	1
-	1100013	Moulding, body, centre	1
-	1100014	Moulding, body, front	1
-	1100015	Moulding, body, rear	1
-	1110012	Moulding, rotor	1
-	3300007	Frame, body	1
-	1800002	Windscreen	1
-	1300001	Step, edge, 6 inch	2
-	1300015	Plate, foot tread	1
-	3500003	Stop, tube end, ¾ inch	4
-	1200002	Handle, small	2
-	1500000	Trim, edge	1
-	1600000	Disc, chrome	4
-	1700012	Decal set	1
-	1200003	Joystick (with fire button)	1
-	2900000	Lamp, type A, red	2
-	2900001	Lamp, type A, amber	3
-	2900005	Lamp, type C, clear	1
-	2920000	Bulb, 12 volt, 5 watt, festoon	5
-	2920002	Bulb, 12 volt, 5 watt, SCC	1

COIN-OPERATED — JOLLY ROGER — AMUSEMENT RIDES

BIG TRUCK RACER

BODY SHELL ASSEMBLY

CONTENTS

Page

Parts list - Big truck racer body shell assembly 3/4

Parts list - Big truck racer body shell assembly

Item No	Part No	Description	Qty
-	1080013	Body shell assembly, comprising:	1
-	1100016	Moulding, body	1
-	1110014	Moulding, roof	1
-	3300008	Frame, body	1
-	3300009	Frame, windscreen	1
-	1300001	Step, edge, 6 inch	2
-	1300015	Plate, foot tread	1
-	1300016	Plate, step tread	2
-	1200001	Handle, large	2
-	1500003	Trim, roof edge	1
-	5100010	Wheel	7
-	7000702	Bolt, M12 x 25	6
-	7000718	Bolt, M12 x 110	1
-	5300000	Wheel, steering, large	1
-	7700301	Nut, dome, 12 mm	2
-	1600000	Disc, chrome	5
-	1700013	Decal set	1
-	2520000	Switch, pushbutton	1
-	2900007	Lamp, type 3	2
-	2920002	Bulb, 12 volt, 5 watt, SCC	2
-	2920001	Bulb, 12 volt, 10 mm, wedge	1

COIN-OPERATED — JOLLY ROGER — AMUSEMENT RIDES

CUP "N" SAUCER CAROUSEL

BODY SHELL ASSEMBLY

CONTENTS

Page

Parts list - Cup "n" Saucer carousel body shell assembly 3/4

Parts list - Cup "n" Saucer carousel body shell assembly

Item No	Part No	Description	Qty
-	1080014	Body shell assembly, comprising:	1
-	1100017	Moulding, body	1
-	1300006	Step, edge, 12 inch	1
-	1300017	Plate, foot tread	1
-	1500000	Trim, edge	1
-	1200002	Handle, small	2
-	2900001	Lamp, type A, amber	4
-	2920000	Bulb, 12 volt, 5 watt, festoon	4

MISCELLANEOUS

COIN-OPERATED — JOLLY ROGER — AMUSEMENT RIDES

COIN ACCEPTOR AND CASH BOX ASSEMBLY

CONTENTS

		Page
Fig 1	Coin acceptor and cash box assembly	2
Parts list -	Coin acceptor and cash box assembly	3/4

Parts list - Coin acceptor and cash box assembly

Item No	Part No	Description	Qty
-	4000000	Cash box, assembly, comprising:	-
1	4100000	Door, cash box, complete with frame	1
2	4100001	Box, cash	1
3	4100002	Lid, cash box	1
4	4100003	Surround, cash box	1
* 5	4100004	Shield	1
6	4200000	Coin acceptor	1
7	4200001	Surround, coin acceptor	1
8	9300000	Lock, complete with keys	1
9	2500000	Microswitch, coin acceptor	1
10	9300001	Lock, complete with keys	1
11	2100003	Counter	1
12	9200000	P-clip	1

* Only fitted on certain models

NOTE : Refer to manufacturer when ordering items from this list.

COIN-OPERATED — JOLLY ROGER — AMUSEMENT RIDES

KIDDIE RIDES

MECHANISM COVER ASSEMBLY

CONTENTS

Page

Fig 1 Kiddie rides mechanism cover assembly 2
Parts list - Kiddie rides mechanism cover assembly 3/4

Parts list - Kiddie rides mechanism cover assembly

Item No	Part No	Description	Qty
-	1090000	Mechanism cover assembly, mini ride	1
-	1090001	Mechanism cover assembly, standard ride	1
-	1090002	Mechanism cover assembly, standard ride with tower	1
-	1090003	Mechanism cover assembly, large ride	1
		Comprising:	
1	1110016	Moulding, top cover, mini ride	1
1	1110017	Moulding, top cover, standard ride	1
1	1110018	Moulding, top cover, standard ride with tower (not illustrated)	1
1	1110019	Moulding, top cover, large ride	1
2	1110020	Moulding, bottom cover, mini ride	1
2	1110021	Moulding, bottom cover, standard ride	1
2	1110022	Moulding, bottom cover, large ride	1
3	9400006	Foot, rubber	4
4	7000204	Bolt, cap head, hexagon socket, M6 x 30	8
5	1300006	Step, edge, 12 inch	2
6	5120001	Castor, 2 inch	2
7	9150001	Gland, cable	2
8	7700000	Nut, Nyloc, M6	4
9	7600002	Washer, M6 x 25 dia, rubber	4
10	7600001	Washer, M6 x 25 dia	4
11	9400007	Gaiter, rubber	1

COIN-OPERATED — JOLLY ROGER — AMUSEMENT RIDES

CUP "N" SAUCER CAROUSEL

MECHANISM COVER ASSEMBLY

CONTENTS

		Page
Fig 1	Cup "n" Saucer carousel mechanism cover assembly	2
Parts list -	Cup "n" Saucer carousel mechanism cover assembly	3/4

Parts list - Cup "n" Saucer carousel mechanism cover assembly

Item No	Part No	Description	Qty
-	1090004	Mechanism cover assembly, comprising:	1
1	1110023	Moulding, mechanism cover	1
2	9150001	Gland, cable	1
3	5120001	Castor, 2 inch	2
4	4100000	Door complete with frame	1
5	2600000	Loudspeaker	1
6	9300001	Lock and key	1
7	2100003	Counter, coin	1
8	7300004	Screw, cap head, hexagon socket, M6 x 30	4
9	9400006	Foot, rubber	4

PROGRAMMABLE MICROPROCESSOR
TIMER/SOUND/FLASHER WIRING
DETAIL

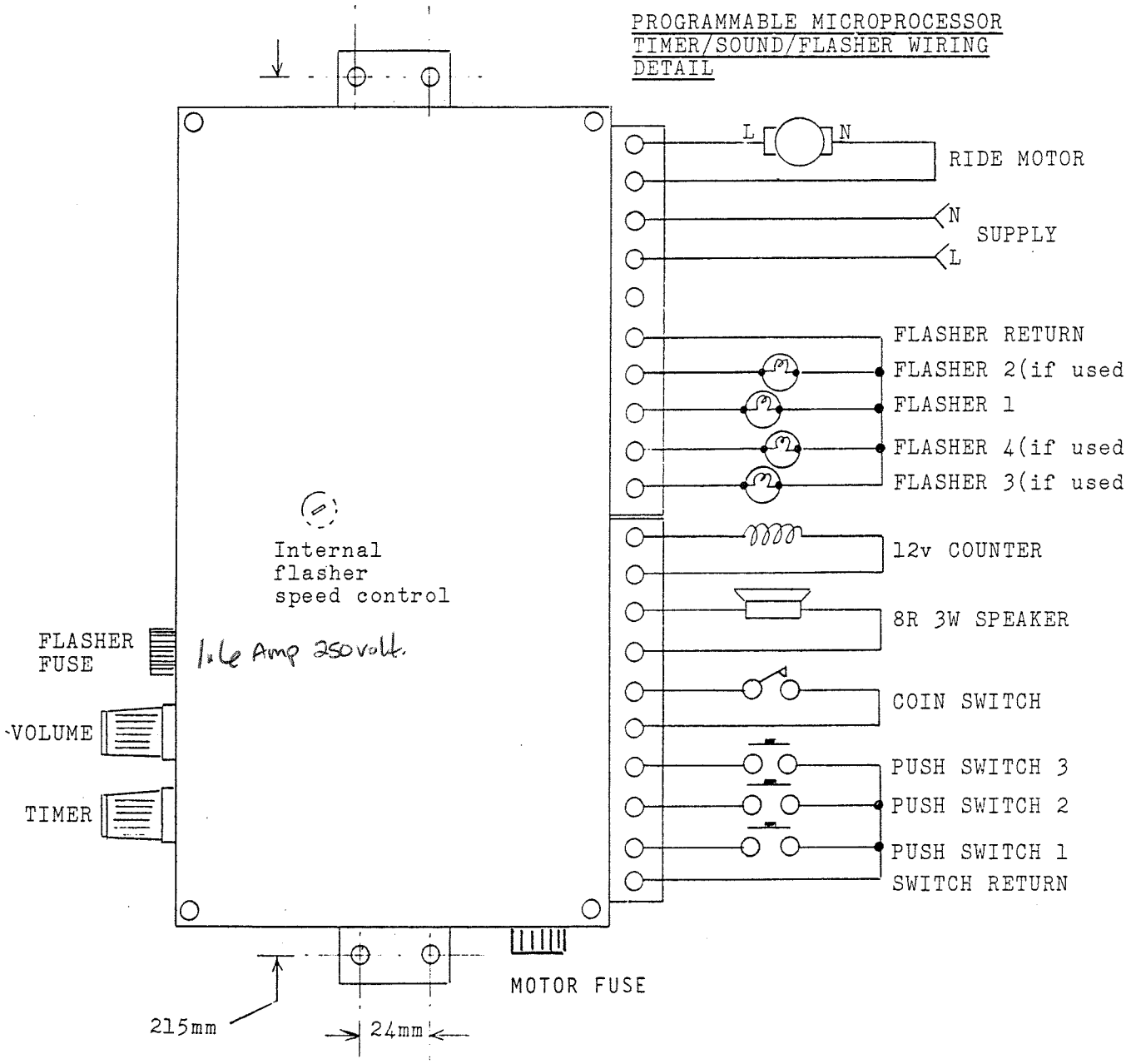
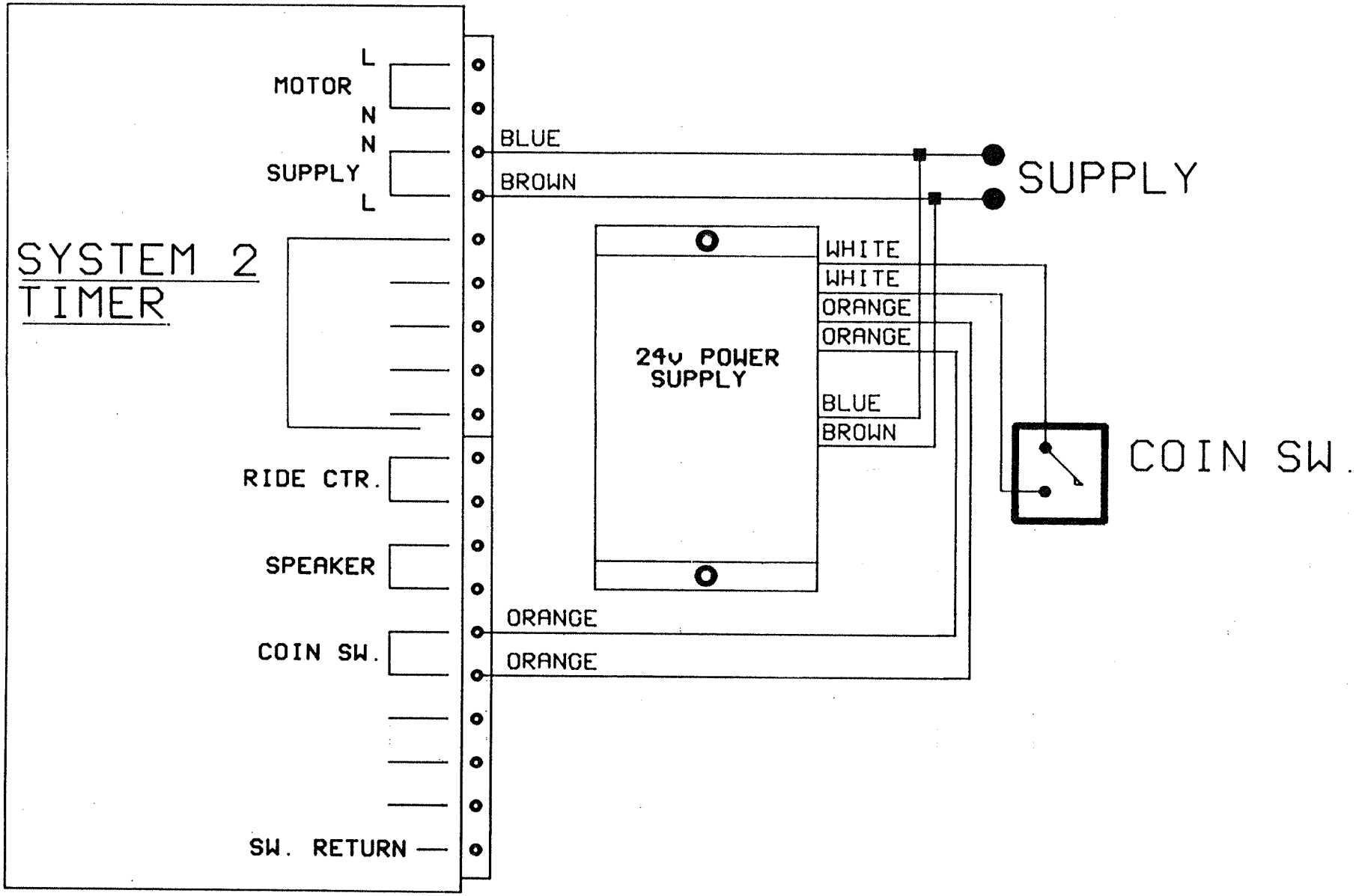
SLIP RING POWER SUPPLY CONECTION DIAGRAM